iDimension PLUS PARCEL STATIC DIMENSIONING SYSTEM

IDIMENSION PLUS

QATAR : T : +974 4436750
M : +974 66257037
KSA : T : +966 13 855 5359
M : +966 53 121 8181
E-mail : info@realtechgulf.com
Website : www.realtechgulf.com

REALTECHNOLOGIES
A Promise ...!
Equipments Supply & Service

Standard Features

- iDim Plus package 1 includes: base plate, telescoping pole assembly, touchscreen display, calibration object, US power cord, operating manual and assembly toolkit.
- iDim Plus package 2 includes: package 1 components and a 150 lb Bench Pro shipping scale.
- iDim Plus package 3 includes: dimensioning head (without pole), 10 ft Ethernet cable, USB display, calibration object, US power cord and operations manual.
- No special package placement requirements.
- Capable to dimension opaque packaging.
- Measurement capabilities beyond Legal for Trade limits.
- High resolution color image, 1920 × 1080 resolution color camera.

Options

- iDimension SS (Software Suite).
- iDimension Desktop Wedge programs for data integration.
- Wired or wireless USB barcode scanner.
- Rice Lake BenchPro shipping/postal scales.
- Rice Lake 680 and 1280 indicators available for automation applications.

A Dimensioning System Like Never Before

- Rice Lake's iDimension Plus is the best-in-class solution for measuring boxes, flats, polybags, tubes and irregular-shaped packages. iDimension Plus eliminates dimensional weight corrections and carrier fees by providing accurate dimension and weight calculations required by parcel and postal carriers.

Easy Setup

- iDimension Plus uses a pre-assembled telescoping pole assembly with scanner height settings at 48 or 60 inches (1.2 or 1.5 meters) above a work surface. The second generation head is backward-compatible with the original pole assembly, making an easy upgrade path to take advantage of improved measuring capabilities. iDimension Plus is also available without a pole assembly for mounting the dimensioning head on a freestanding frame or existing structure.

Speed and Accuracy

- Parcels are dimensioned faster and more accurately than manual measurements, eliminating the risk of human error while gaining eficiency and labor savings. With industry-leading speed, parcels are automatically measured within 0.2 inches (5 mm), with no need for special alignment or handling while placing a package under the dimensioner. iDimension Plus can dimension irregular-shaped packages such as cylinders, spheres, tubes, polybags and uneven shapes.

Innovative Technology

- iDimension Plus uses the latest dimensioning technology coupled with industry-leading algorithms to deliver Legal for Trade dimensions in a fraction of a second. Using an attached BenchPro scale and RGB Assist mode, dimensions can be captured for envelopes, flats and small objects that fall below the 2.4- inch Legal for Trade limit. iDimension Plus comes standard with Ethernet TCP/IP, dual USB-A ports and Wi-Fi.

Operator Display

- A 10-inch color touchscreen display provides instant feedback, with images, dimensions, weights and intuitive operator functions for day-to-day use.

Operating Versatility

- iDimension Plus has automatic and manual trigger configurations. A small footprint and configurable scan area provide easy integration into any workspace.



RICE LAKE®
WEIGHING SYSTEMS

iDimension PLUS PARCEL STATIC DIMENSIONING SYSTEM

Specifications

- Power Requirements:
  110 to 240 VAC
- Communication Ports:
  (2) USB A
  (1) 10/100/1000 Base-T Ethernet
  Wi-Fi 802.11 ac
- Display:
  10 in (254 mm) touchscreen monitor
- Accuracy:
  Certified Legal for Trade at 0.2 in (5 mm)
- Software Integration:
  Simple API network integration through HTTP requests, status checking and XML parsing
- Temperature:
  Certified: 32 °F to 95 °F (0 °C to 35 °C)
- Humidity:
  Non-condensing
- Warranty:
  Two-year limited
- Approvals:
  NTEP
  OIML
  CE
  EU MID
  FCC

Legal for Trade Minimum and Maximum Measurement Capability

Platform Distance	48 in (1.2 m)		1.5 m		2 m XL	
Min/Max*	Min	Max	Min	Max	Min	Max
Length	2.4 in (50 mm)	39 in (1,000 mm)	2.4 in (50 mm)	48 in (1,200 mm)	4 in (100 mm)	48 in (1,200 mm)
Width	2.4 in (50 mm)	24 in (600 mm)	2.4 in (50 mm)	32 in (800 mm)	4 in (100 mm)	32 in (800 mm)
Height	2.4 in (50 mm)	24 in (600 mm)	2.4 in (50 mm)	28 in (700 mm)	4 in (100 mm)	32 in (800 mm)
Division	0.2 in (5 mm)		0.2 in (5 mm)		0.5 in (10 mm)	

**With RGB assist enabled smaller measurements are possible*

Largest Box Measurement Capability for Max Length vs. Max Height

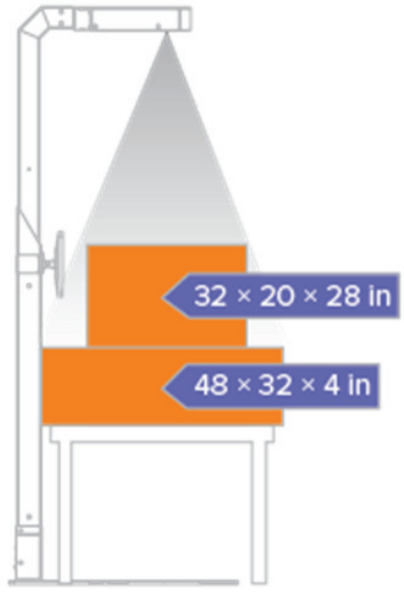

Pole Assembly Height	Minimum LFT Box Size	Maximum LFT Box Size	
Largest Box with Max Height	48 in (1.2 m)	2.4 × 2.4 × 2.4 in (50 × 50 × 50 mm)	24 × 14 × 24 in (600 × 350 × 600 mm)
Largest Box with Max Height	48 in (1.2 m)	2.4 × 2.4 × 2.4 in (50 × 50 × 50 mm)	39 × 24 × 8 in (1,000 × 240 × 200 mm)
Largest Box with Max Height	60 in (1.5 m)	2.4 × 2.4 × 2.4 in (50 × 50 × 50 mm)	32 × 20 × 28 in (800 × 500 × 700 mm)
Largest Box with Max Height	60 in (1.5 m)	2.4 × 2.4 × 2.4 in (50 × 50 × 50 mm)	48 × 32 × 4 in (1,200 × 800 × 100 mm)

IDIMENSION PLUS
QATAR : T : +974 44436750
M : +974 66257037
KSA : T : +966 13 855 5359
M : +966 53 121 8181
E-mail : info@realtechgulf.com
Website : www.realtechgulf.com
REALTECHNOLOGIES
A Promise ....!
Equipments Supply & Service

IDIMENSION PLUS
QATAR: T : +974 4436750
M : +974 66257037
KSA: T : +966 13 855 5359
M : +966 53 121 8181
E-mail : info@realtechgulf.com
Website : www.realtechgulf.com
REALTECHNOLOGIES
A Promise ....!
Equipments Supply & Service

Portable Cart Dimensions

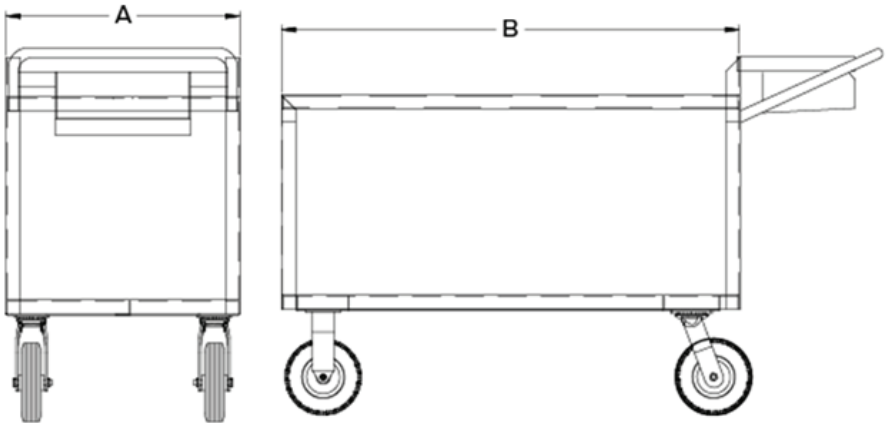

Portable Cart			
A	24.00 in (610 mm)	B	48.00 in (1,219 mm)

Portable Cart Dimensions

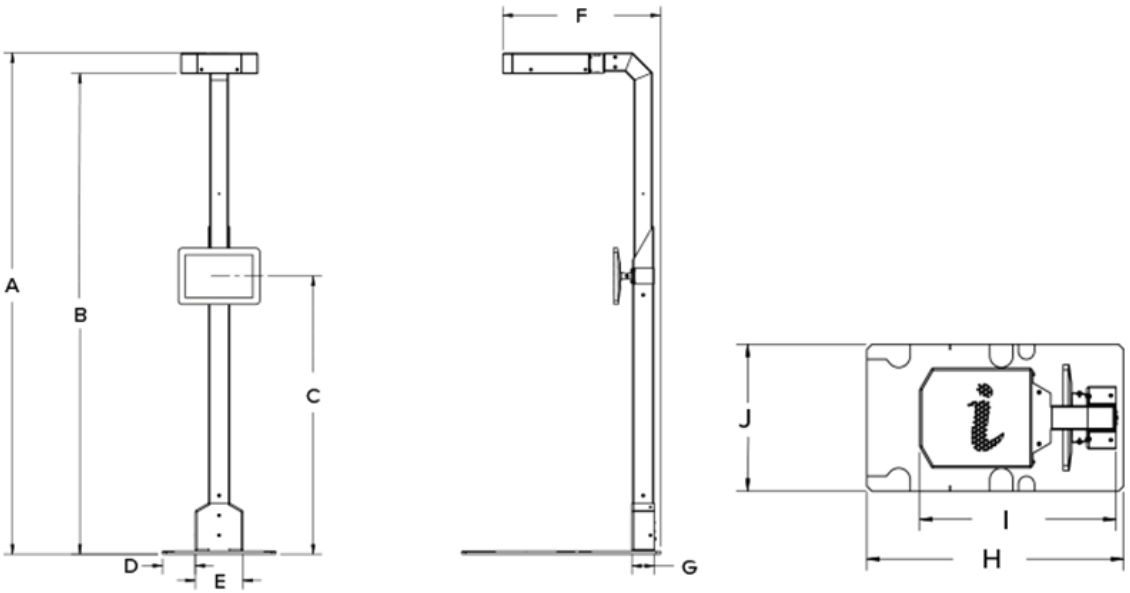

iDimension Plus			
A	63.10 in (1,603 mm)	F	19.85 in (504 mm)
B	60.50 in (1,537 mm)	G	2.84 in (72 mm)
C	35.00 in (889 mm)	H	25.00 in (635 mm)
D	4.13 in (105 mm)	I	19.10 in (485 mm)
E	6.00 in (152 mm)	J	14.25 in (362 mm)

iDimension Plus Scanning Head Assembly Dimensions

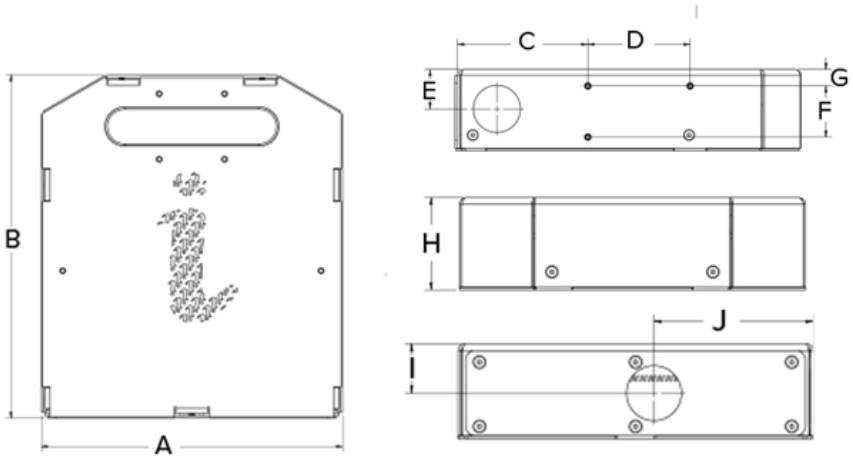

Dimensions					
A	9.66 in (229 mm)	E	1.25 in (51 mm)	I	1.35 in (114 mm)
B	10.99 in (216 mm)	F	1.62 in (15 mm)	J	4.33 in (38 mm)
C	4.14 in (183 mm)	G	0.52 in (41 mm)		
D	3.25 in (84 mm)	H	2.58 in (38 mm)		

Optional iDimension Plus Floor Mount Stand Assembly Dimensions

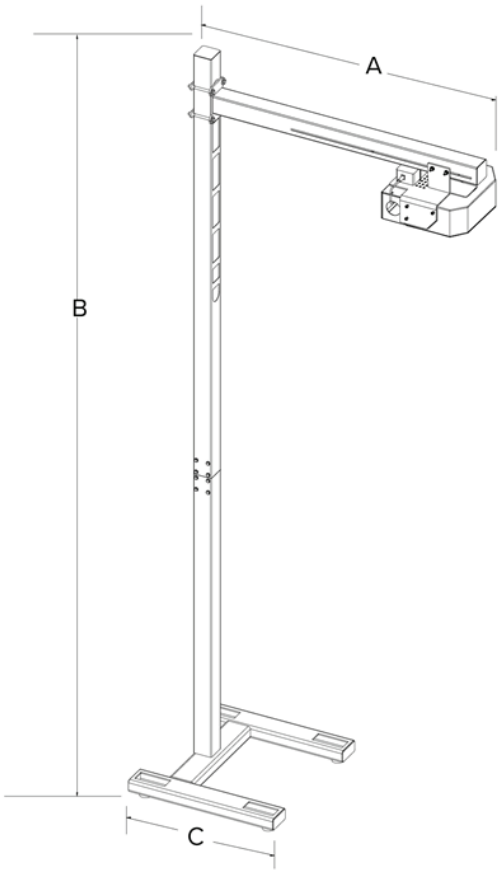

Dimensions	
A	47.34 in (1,202 mm)
B	123.13 in (3,128 mm)
C	24.21 in (615 mm)

IDIMENSION PLUS
QATAR: T : +974 4436750
M : +974 66257037
KSA: T : +966 13 855 5359
M : +966 53 121 8181
E-mail : info@realtechgulf.com
Website : www.realtechgulf.com
REALTECHNOLOGIES
A Promise ....!
Equipments Supply & Service

iDimension Plus Mounting Bracket (pn 198708) Dimensions

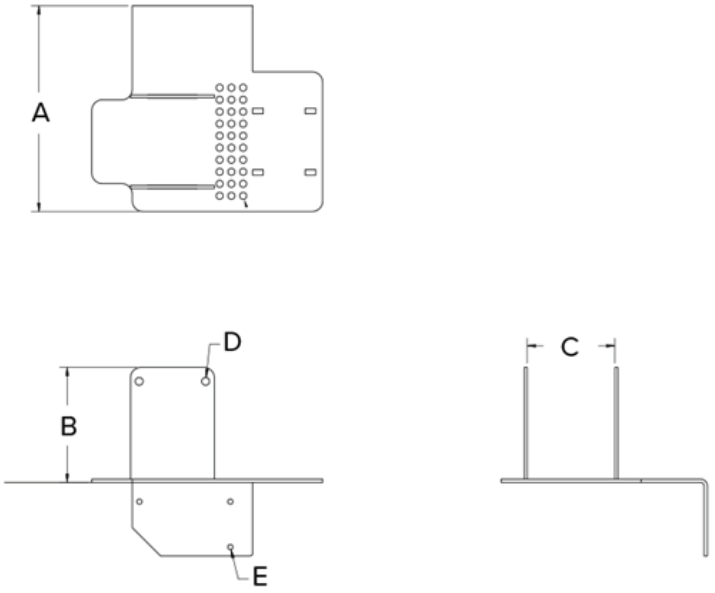

Dimensions			
A	7.37 in (187 mm)	D	2× 0.28
B	4.12 in (105 mm)	E	3× 0.19
C	3.14 in (80 mm)		

IDIMENSION PLUS
QATAR: T : +974 4436750
M : +974 66257037
KSA : T : +966 13 855 5359
M : +966 53 121 8181
E-mail : info@realtechgulf.com
Website : www.realtechgulf.com
REALTECHNOLOGIES
A Promise ....!
Equipments Supply & Service