iDimension LTL/LTL XL Pallet Dimensioning System



RICE LAKE
WEIGHING SYSTEMS

Standard Features

- 360° fork truck access for easy pallet placement in the target zone.
- Displays dimensions in 2 seconds.
- Minimal set up and training required.
- Bounding box images identify measurement cube.
- Color camera.

Options

- Second color camera.
- Work area and target zone LED light kit.
- 21.5 inch operator display provides instantaneous feedback to the forklift or pallet jack operator.
- iDimension SS for storing data and images transferring data to ERP and WMS systems.
- Stop & Go activation.

A Freight Dimensioner That Assures Eficiency

- The iDimension LTL uses advanced sensing technology to find the cubic dimensions of freight, ensuring freight code compliance is recorded and declared. Ideal for LTL carriers and companies with a high percentage of product shipped via pallet or crate, dimensioning removes human error when taking measurements. The extra labor of manually calculating is eliminated when dimensioners capture freight dimensions in less than two seconds.

Real-time Assessment for Accurate Pallet Dimensioning

- Depending on the application, up to two high-resolution cameras perform freight identification, damage assessment and tracking. To easily line up within view of the cameras, an LED light kit reflects a light grid on the floor to assist forklift drivers without painting or taping guides. The operator display provides instantaneous feedback to the operator, communicating dimensions and system status.

Quality Freight Dimensioning Systems That Last

- With no moving parts and a solid-state design, the iDimension LTL can easily integrate into a typical LTL environment and be installed in one day. Its rugged computer and industrial electrical components can withstand the extreme conditions of shipping docks. With network integration, it can suit any facility's system.

LTL /LTL XL Specifications

- Legal for Trade Measurement Capability:
  LTL Drop and Clear:
  Min: 12 × 12 × 12 in (30 × 30 × 30 cm)
  Max: 96 × 96 × 96 in (244 × 244 × 244 cm)
  LTL XL Drop and Clear:
  Min: 12 × 12 × 12 in (30 × 30 × 30 cm)
  Max: 144 × 96 × 96 in (365 × 244 × 244 cm)
  Stop & Go:
  Min: 12 × 12 × 12 in (30 × 30 × 30 cm)
  Max: 72 × 72 × 84 in (183 × 183 × 213 cm)
- Power Requirements:
  110 to 240 VAC
  25 ft (7.62 m) power cable included
- Measurement Increment:
  NTEP: 0.5 in
  OIML: 2 cm
- Dimensioning Speed:
  Within 2 seconds from trigger to scan complete
- Performance Characteristics:
  Most surfaces are captured, including black plastic shrink wrap. Transparent/translucent and glossy surfaces may provide a variance.
- Stop & Go Measurement Performance Characteristics:
  Stop-trigger-go 2 seconds for Legal for Trade results. Best when used with a Rice Lake Legal for Trade forklift scale.
- Item Placement:
  Single pallet within the center of the target zone for best performance
- Minimum Pallet Height:
  4.25 in (108 mm) wood pallets
- Minimum Ceiling Height:
  12.75 ft
- Shapes:
  Solid shapes, 3 in (76 mm) protrusions will be included in dimensions
- Lighting Conditions:
  Operates in any indoor lighting environment
- Temperature:
  Operating:
  14 °F to 104 °F (-10 °C to 40 °C)
- Humidity:
  0 to 90% non-condensing
- Warranty:
  Two-year limited (extended warranty available for purchase)
  Sensors: ve-year limited
- Approvals:
  NTEP 19-076
  OIML R129-2000-A-NL1-24.04
  EU MID T12563
  FCC
  CE

IDIMENSION LTL/LTL

QATAR: T : +97444436750
M : +97466257037

KSA: T : +966 13 855 5359
M : +966 53 121 8181

E-mail : info@realtechgulf.com
Website : www.realtechgulf.com

REALTECHNOLOGIES
A Promise ...!
Equipments Supply & Service

QATAR : T : +974 44436750
M : +974 66257037
KSA : T : +966 13 855 5359
M : +966 53 121 8181
E-mail : info@realtechgulf.com
Website : www.realtechgulf.com

REALTECHNOLOGIES
A Promise ...!
Equipments Supply & Service

iDimension LTL/LTL XL Pallet Dimensioning System

LTL XL Dimensions

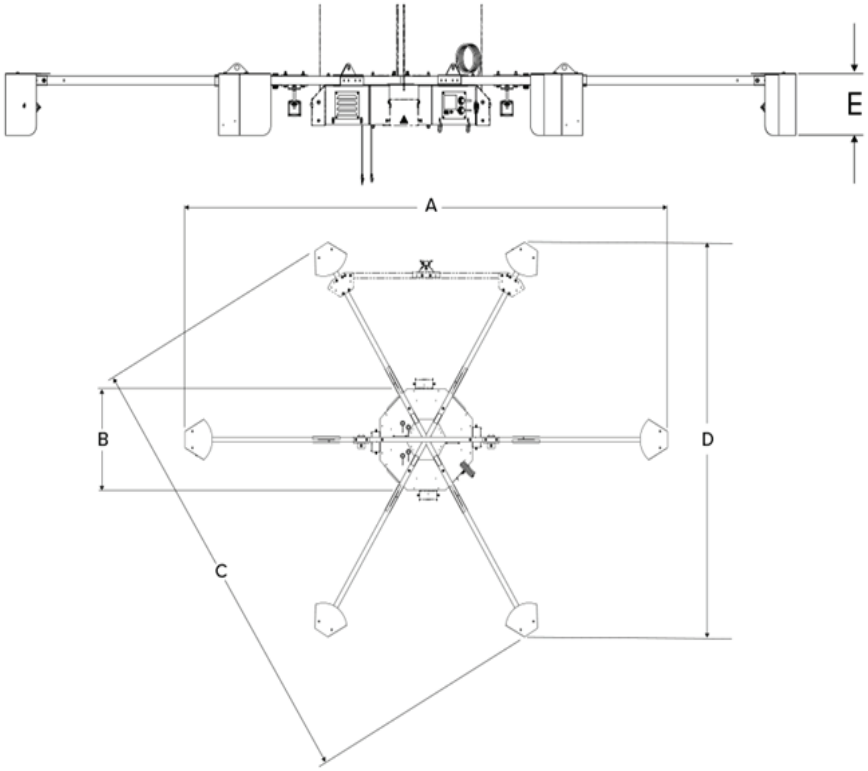

iDimension LTL/LTL XL Dimensions			
A	178.28 in (4,528 mm)	D	131.83 in (3,348 mm)
B	34.00 in (864 mm)	E	12.64 in (321 mm)
C	150.44 in (3,821 mm)		

System Overview

