iDimension Flex Series Pallet And Box Static Dimensioning System





RICE LAKE
WEIGHING SYSTEMS

Standard Features

- Floor mounted free-standing frame or suspend from the ceiling.
- One high resolution camera (one additional camera available).
- Install/integrate with a floor scale, conveyor or pallet stretch wrapper.
- Easy two-person assembly.
- Legal for Trade dimensions in under 2 seconds.
- Network integration tool kit.
- Top side junction box.

Applications

- Pallet dimensioning, above a target zone, scale, conveyor or stretch wrapper to dimension cuboidal and irregular freight.

Options

- Kiosk pedestal base available.
- Second high resolution camera.
- Additional sensor to assist reading black stretch film.
- Weigh scale and indicator not included.

Flexible Dimensioning System

- The iDimension Flex Series brings state-of-the-art dimensioning technology to shipping and logistics professionals. Ensure accurate dimensions on your bill of lading and protect against costly invoice corrections from LTL carriers by integrating automatic dimensioning systems. The iDimension Flex Series is available in two diferent confi gurations: free-standing and suspended. Both versions provide clear access to the dimensioning zone. When the iDimension Flex is installed above a conveyor or pallet stretch wrapper, you can eficiently wrap, weigh and dimension freight in one step. A center sensor can be added to the junction box on iDimension Flex systems to accurately capture dimensions of freight wrapped in black plastic.

Flexible Configuration

- The iDimension Flex Series is available with four or five sensors to measure cuboidal or irregular freight. The system can be suspended from the ceiling or be free-standing to meet the needs of your operation. A twosensor version can also be installed above a conveyor to dimension parcels longer than 48 inches.

Claims Defense

- When shipment dimensions are measured, the iDimension Flex also captures color images to record shipment condition before it leaves your facility. These images can then be used to hold freight carriers accountable for any damages.

Certified Legal for Trade

- iDimension Flex systems provide NTEP Certified Legal for Trade dimensions for best-in-class accuracy. Carriers are less likely to audit freight that is measured with Legal for Trade dimensioners, which increases eficiency in their operations and may lead to savings for shippers.

iDimension Flex Series Pallet and Box Static Specifications

- Legal for Trade Measurement Capability:
  Min: 12 × 12 × 12 in (300 × 300 × 300 mm)
  Max: 96 × 96 × 96 in (2,438 × 2,438 × 2,438 mm)
- Communication Ports:
  Ethernet TCP/IP, USB, Serial RS232
- Power Requirements:
  110 to 240 VAC
  25 ft (7.62 m) U.S. power cable included
- Temperature:
  14 °F to 104 °F (-10 °C to 40 °C)
- Humidity:
  0 to 90% non-condensing
- Warranty:
  Two-year limited
  Five-year limited, sensors only
- Approvals:
  NTEP 19-076A4
  OIML
  CE Marked
  FCC
  MID Certified

iDimension Flex
QATAR: T : +97444436750
M : +97466257037
KSA : T : +966 13 855 5359
M : +966 53 121 8181
E-mail : info@realtechgulf.com
Website : www.realtechgulf.com
REALTECHNOLOGIES
I Promise ...!
Equipments Supply & Service

iDimension Flex Series Pallet And Box Static Dimensioning System

iDimension Flex Series Pallet and Box Static Free Dimensions

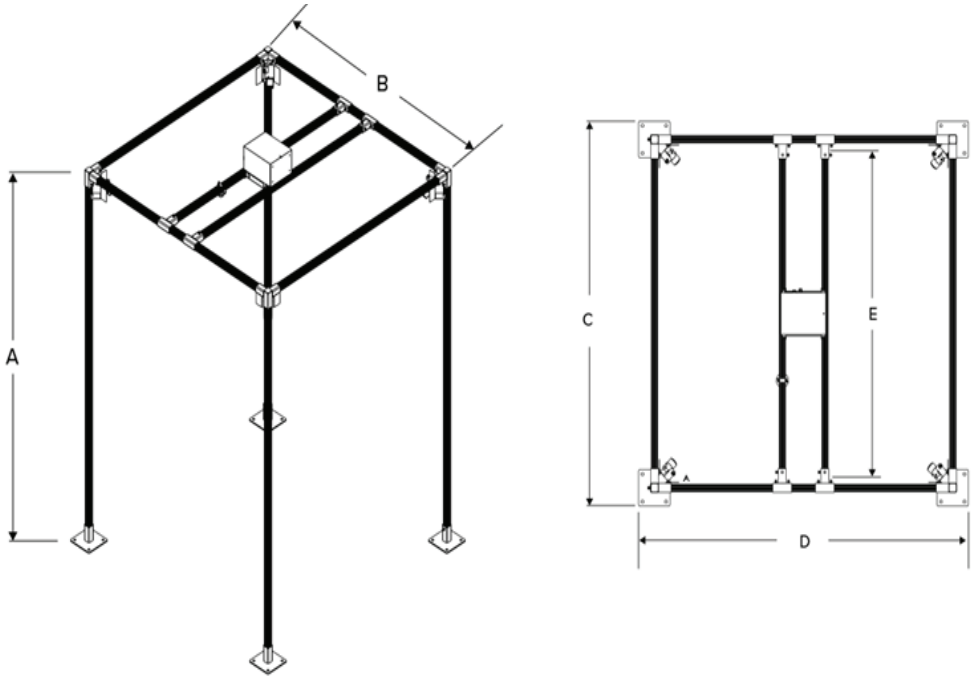

iDimension Flex Free Dimensions			
A	145.38 in (3,693 mm) max	D	105.00 in (2,667 mm) max
B	93.00 in (2,362 mm)	E	85.08 in (2,161 mm)
C	104.88 in (2,664 mm) max		

iDimension Flex Series Pallet and Box Static Suspension Dimensions

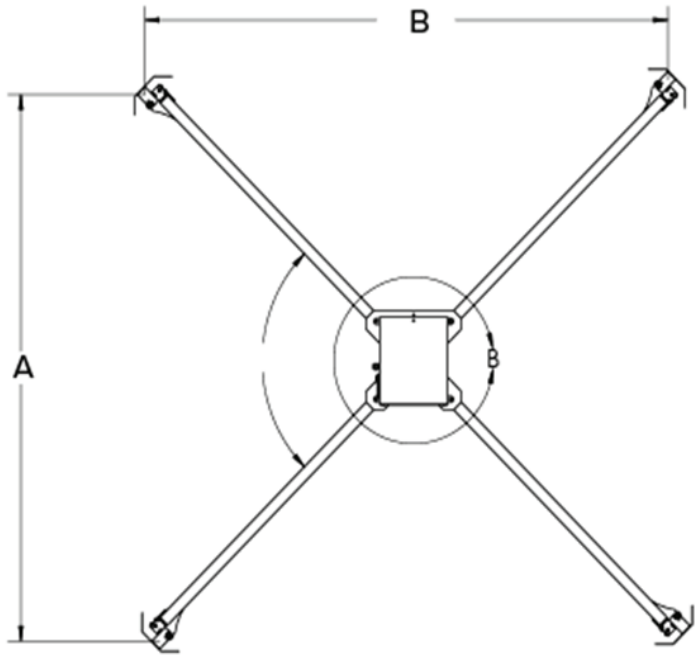

iDimension Flex Suspension Dimensions			
A	88.12 in (2,238 mm)	B	88.12 in (2,238 mm)

QATAR : T : +974 44436750
M : +974 66257037
KSA : T : +966 13 855 5359
M : +966 53 121 8181
E-mail : info@realtechgulf.com
Website : www.realtechgulf.com

REALTECHNOLOGIES
A Promise ...!
Equipments Supply & Service